STATE OF ALASKA
DEPARTMENT OF NATURAL RESOURCES
DIVISION OF PARKS AND OUTDOOR RECREATION

DOF: WILLER-KASH ROAD ACCESS IMPROVEMENTS REBID

PROJECT NO. 37107-2

In Cooperation with the Alaska Division of Forestry, Department of Fish and Game, & Pittman-Robertson Hunter Access Program

Vicinity Map

TOWNSHIP 20 NORTH,
RANGE 3 WEST, SEWARD MERIDIAN, USGS QUAD TYONEK C-1

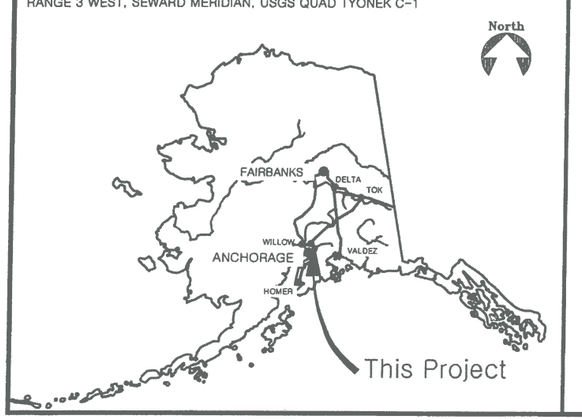

INDEX

1. TITLE SHEET
2. ESTIMATE OF QUANTITIES, LEGEND, ABBREVIATIONS, SIGN SUMMARY, AND VICINITY MAP
3. EXISTING CONDITIONS
4. SITE PLAN
5. TYPICAL SECTIONS

The following D.O.T.(Highways) standard drawings apply to this project: D-01.02, D-04.22, D-06.10, S-00.11, S-05.01, S-30.04

Plans developed by:
STATE OF ALASKA
Department of Natural Resources
Division of Parks & Outdoor Recreation
550 W 7th Ave. Suite 1340, Anchorage, AK 99501

Recommended:

Rys Miranda, P.E. — 4/20/2021 Date
Chief, Design and Construction

Approved:

Timothy A. Dabney — Digitally signed by Timothy A. Dabney Date: 2021.04.16 12:36:07 -08'00'
Tim Dabney — Date
Director, Division of Forestry

ESTIMATE OF QUANTITIES			
ITEM	DESCRIPTION	UNIT	QTY
203(5A)	BORROW, TYPE A	C.Y.	3,800
303(1)	RECONDITIONING	STATION	66
603(17-18)	18 INCH PIPE	L.F.	120
603(20-18)	END SECTION FOR 18 INCH PIPE	EACH	8
615(1)	STANDARD SIGN	S.F.	1.33
618(2)	SEEDING	LB	32
620(1)	TOPSOIL, CLASS B	S.Y.	3,500
630(1)	GEOTEXTILE, SEPARATION	S.Y.	11,000
640(1)	MOBILIZATION AND DEMOBILIZATION	L.S.	ALL REQ'D
641(1)	EROSION, SEDIMENT AND POLLUTION CONTROL ADMINISTRATION	L.S.	ALL REQ'D
641(2)	TEMPORARY EROSION, SEDIMENT, AND POLLUTION CONTROL	C.S.	ALL REQ'D
641(6)	WITHHOLDING	C.S.	ALL REQ'D
642(1)	CONSTRUCTION SURVEYING	L.S.	ALL REQ'D
642(3)	THREE PERSON SURVEY PARTY	HOUR	5
643(2)	TRAFFIC MAINTENANCE	L.S.	ALL REQ'D
647(6)	HYDRAULIC EXCAVATOR, 1 CY, 100 HP, MINIMUM	HOUR	5

TABLE OF ESTIMATING FACTORS		
ITEM	DESCRIPTION	ESTIMATING FACTOR
203(5A)	BORROW, TYPE A	145 LBS/C.F.

ITEM 615(1) STANDARD SIGN									
SIGN NO.	FACING	TYPE	LEGEND	SIZE (IN X IN)	AREA (S.F.)	THICKNESS (IN.)	SIGN POST DATA		
							TYPE	SIZE (IN.)	NO.
S1	SOUTH	CS-1	[CUSTOM] [SIGN]	16 X 12	1.33	0.125	PT	2.5 X 2.5	1
		STA 104+00							
		RIGHT							

LEGEND

EXISTING	PROPOSED	
		EDGE OF VEGETATION
		EDGE OF WATER
100	100	MAJOR CONTOUR LINE
		MINOR CONTOUR LINE
		EDGE OF ROAD/PARKING
		LIMIT OF FILL SLOPE
		LIMIT OF CUT SLOPE
		CULVERT
		SURVEY CONTROL MONUMENT
		SIGN

ABBREVIATIONS

Φ	DIAMETER
℄	CENTERLINE
A.	APPROXIMATE
C.F.	CUBIC FOOT
C.S.	CONTINGENT SUM
CSP	CORRUGATED STEEL PIPE
C.Y.	CUBIC YARD
ELEV	ELEVATION
EST.	ESTIMATE
IN.	INCH
INV.	INVERT
LB/LBS	POUND/POUNDS
L.F.	LINEAR FEET
L.S.	LUMP SUM
MIN	MINIMUM
M.E.	MATCH EXISTING
MP	MILEPOST
NO.	NUMBER
QTY.	QUANTITY
REQ'D	REQUIRED
S.F	SQUARE FEET
STA	STATION
S.Y	SQUARE YARD
TYP.	TYPICAL

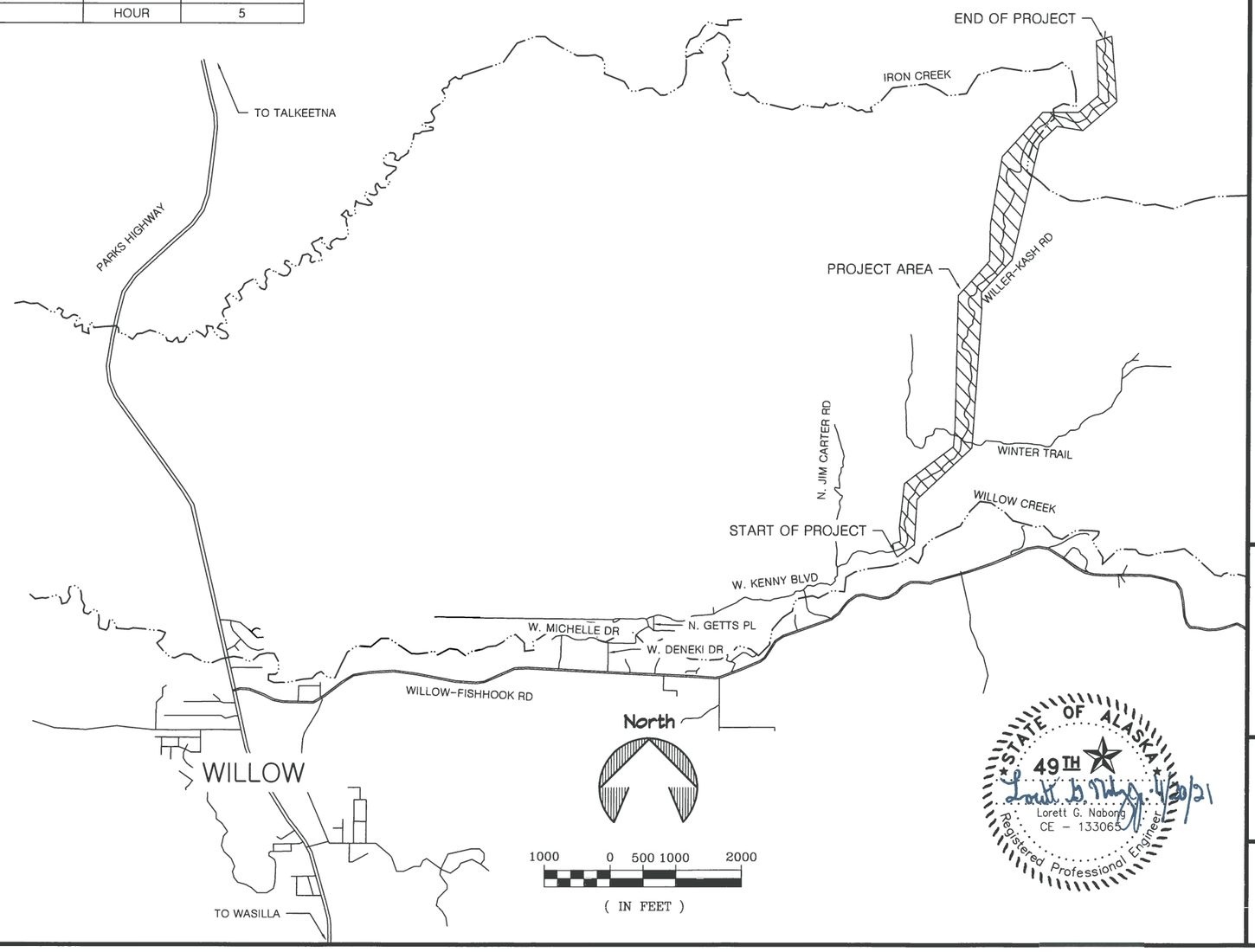

STATE OF ALASKA
49TH
Lorett G. Nabong
CE - 133065
Registered Professional Engineer
4/20/21

STATE OF ALASKA, DEPARTMENT OF NATURAL RESOURCES
PLANS DEVELOPED BY: DIVISION OF PARKS AND OUTDOOR RECREATION
550 W 7TH AVE. SUITE 1340, ANCHORAGE, AK 99501 - 907.269.8731

DOF: WILLER-KASH ROAD
ACCESS IMPROVEMENTS REBID
PROJECT No. 37107-2

ESTIMATE OF QUANTITIES, LEGEND, ABBREVIATIONS, SIGN SUMMARY, AND VICINITY MAP

ALASKA STATE PARKS

PREPARED: ROM
DRAWN: ROM
REVIEWED: LGN
DATE: 4/13/2021

SHEET 2 OF 5 SHEETS

NOTE:
1. SURVEY INFORMATION IS BASED ON A SURVEY PERFORMED BY ALASKA STATE PARKS IN OCTOBER 2020.
2. ADDITIONAL TOPOGRAPHIC DATA REFERENCED FROM 2011 MATANUSKA BOROUGH LIDAR SURVEY.

SURVEY CONTROL POINT SUMMARY

CONTROL POINT	NORTHING	EASTING	ELEVATION
CP1	2842325.5590	1657578.4770	440.2637
CP2	2842232.6600	1657491.6280	436.5137
CP3	2842335.2960	1657403.7950	431.0904
CP4	2857407.0550	1664882.5180	714.2985
CP5	2848223.5630	1663218.6790	649.1904

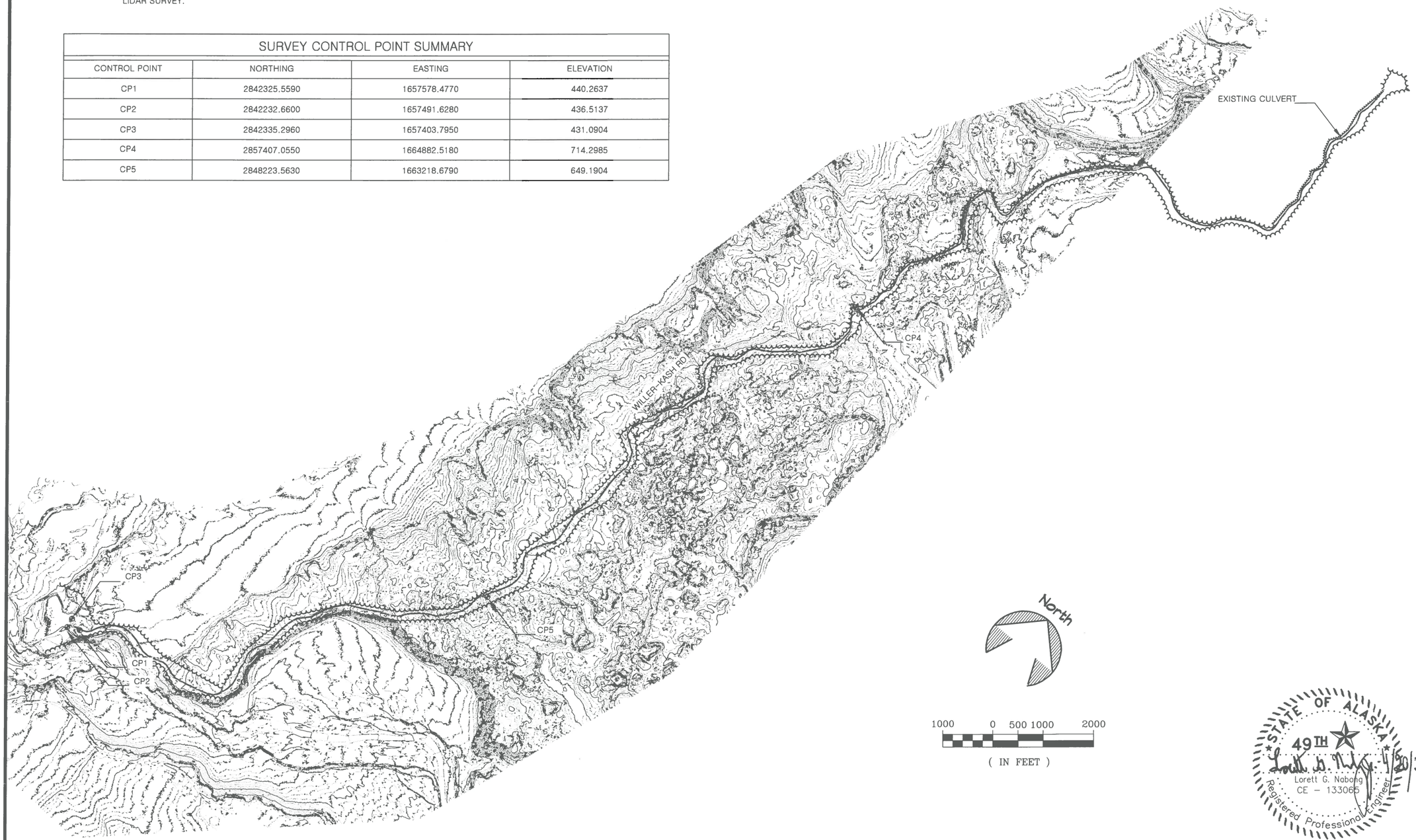

STATE OF ALASKA
49TH
Lorett G. Nabong
CE - 133065
Registered Professional Engineer
4/20/21

STATE OF ALASKA, DEPARTMENT OF NATURAL RESOURCES
PLANS DEVELOPED BY: DIVISION OF PARKS AND OUTDOOR RECREATION
550 W 7TH AVE. SUITE 1340, ANCHORAGE, AK 99501 - 907.269.8731

EXISTING CONDITIONS

DOF: WILLER-KASH ROAD
ACCESS IMPROVEMENTS REBID
PROJECT No. 37107-2

ALASKA STATE PARKS

PREPARED: ROM
DRAWN: ROM
REVIEWED: LGN
DATE: 4/13/2021

SHEET 3 OF 5 SHEETS

North

GRAPHIC SCALE

1500 0 750 1500 3000

(IN FEET)

NOTES:

1. STATIONING SHOWN FOR REFERENCE PURPOSES ONLY. ALIGNMENT & STATIONING SHOWN CORRESPONDS TO EXISTING CENTERLINE ROAD ALIGNMENT.
2. SPECIFIC SITE, SIGN, AND CULVERT LOCATIONS WILL BE CONFIRMED IN THE FIELD BY THE ENGINEER IN CONJUNCTION WITH THE CONTRACTOR.

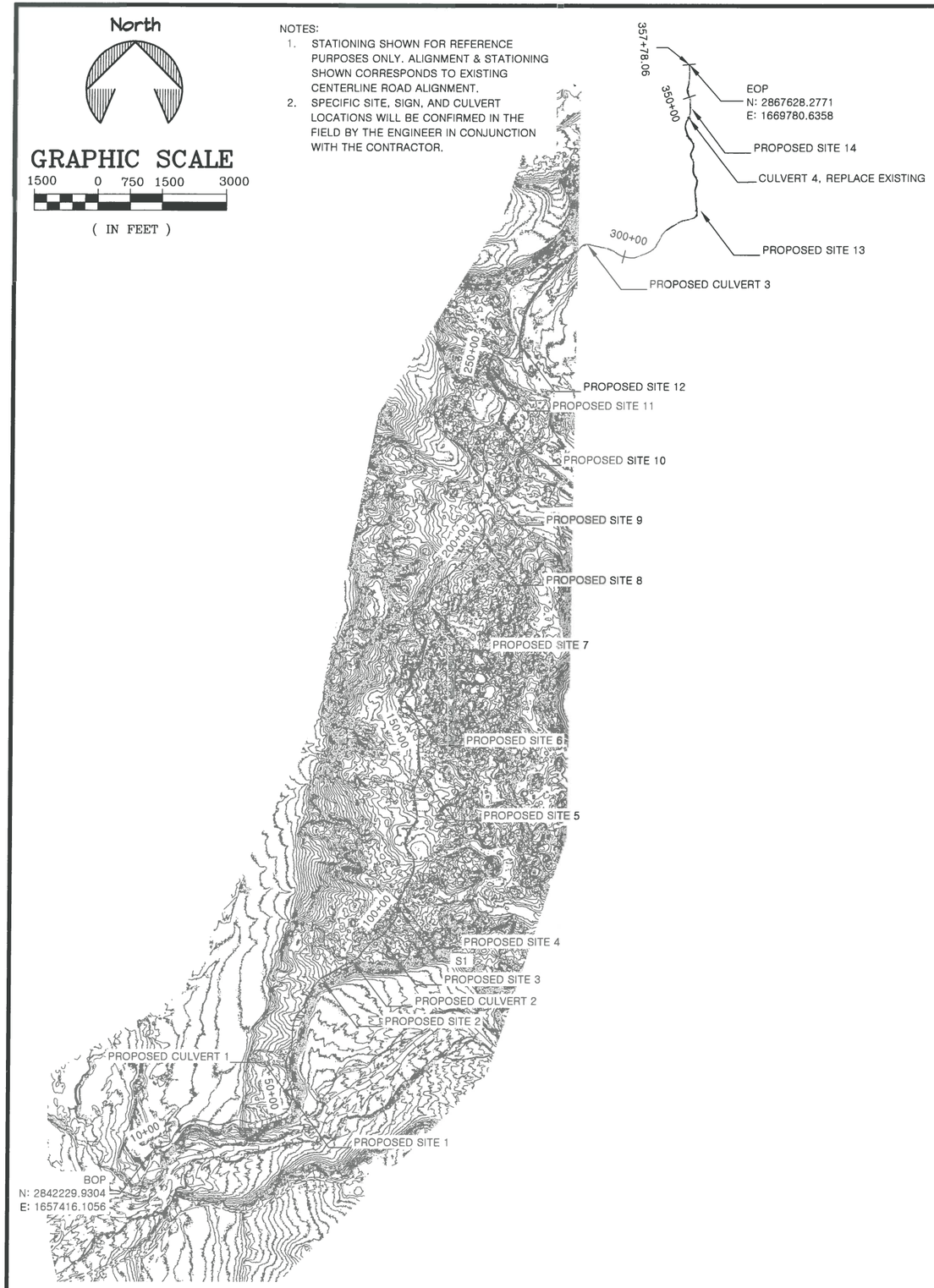

PROPOSED SITE TABLE

SITE NO.	START STATION	END STATION	RECONDITION (FT)	CONSTRUCT ROAD EMBANKMENT (FT)	BORROW VOLUME (CY)
1	48+31	49+99	168.0	–	–
2	78+44	80+50	–	206.0	106.0
2	80+50	83+00	250.0	–	–
2	83+00	90+80	–	780.0	449.0
3	96+05	101+00	495.0	–	–
3	101+00	102+39	–	139.0	66.0
4	105+62	108+00	238.0	–	–
4	108+00	113+00	–	500.0	281.0
4	113+00	121+50	850.0	–	–
4	121+50	123+59	–	209.0	108.0
5	137+50	144+18	668.0	–	–
6	156+81	161+50	–	469.0	263.0
6	161+50	166+00	450.0	–	–
6	166+00	168+50	–	250.0	132.0
6	168+50	179+92	1142.0	–	–
7	184+10	187+49	–	339.0	185.0
8	204+35	205+39	–	104.0	45.0
9	219+07	220+50	–	143.0	68.0
9	220+50	222+00	150.0	–	–
9	222+00	224+86	–	286.0	154.0
10	234+23	241+00	677.0	–	–
10	241+00	246+66	–	566.0	321.0
11	248+38	249+93	155.0	–	–
12	260+85	267+32	–	647.0	369.0
13	322+43	338+00	–	1557.0	913.0
13	338+00	344+76	676.0	–	–
14	347+45	354+02	657.0	–	–
TOTAL			6576.0	6195.0	3460.0

CULVERTS

CULVERT NO.	CULVERT STATION	DIAM.	APPROX. LENGTH	TYPE	NOTES	END SECTIONS
1	47+25	18"	30'	CSP	NEW INSTALLATION	2
2	87+10	18"	30'	CSP	NEW INSTALLATION	2
3	291+00	18"	30'	CSP	NEW INSTALLATION	2
4	345+05.19	18"	30'	CSP	REMOVE EXISTING AND PLACE NEW	2

STATE OF ALASKA
49TH
Lorett G. Nabong
CE – 133065
Registered Professional Engineer

STATE OF ALASKA, DEPARTMENT OF NATURAL RESOURCES
PLANS DEVELOPED BY: DIVISION OF PARKS AND OUTDOOR RECREATION
550 W 7TH AVE. SUITE 1340, ANCHORAGE, AK 99501 - 907.269.8731

SITE PLAN

DOF: WILLER-KASH ROAD
ACCESS IMPROVEMENTS REBID
PROJECT No. 37107-2

ALASKA STATE PARKS

PREPARED: ROM
DRAWN: ROM
REVIEWED: LGN
DATE: 4/13/2021

SHEET 4 OF 5 SHEETS

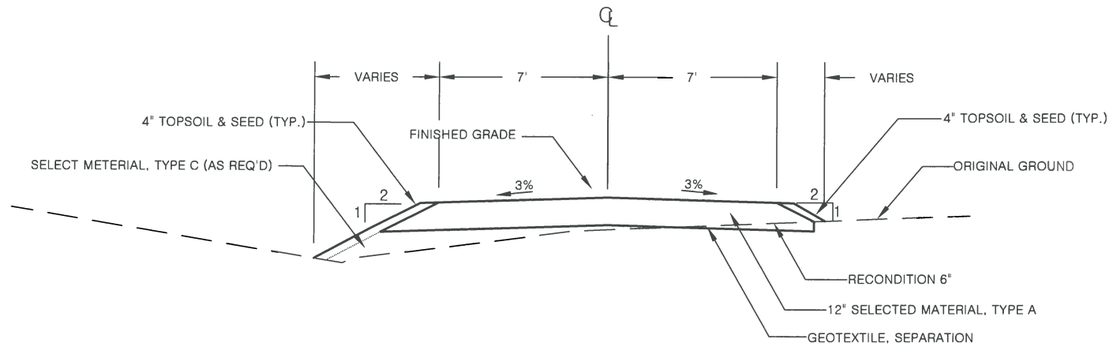

1/5 TYPICAL SECTION
EMBANKMENT CONSTRUCTION

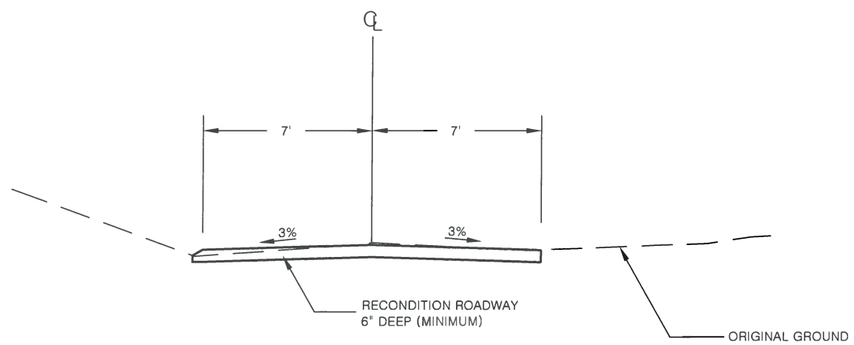

2/5 TYPICAL SECTION
RECONDITIONING

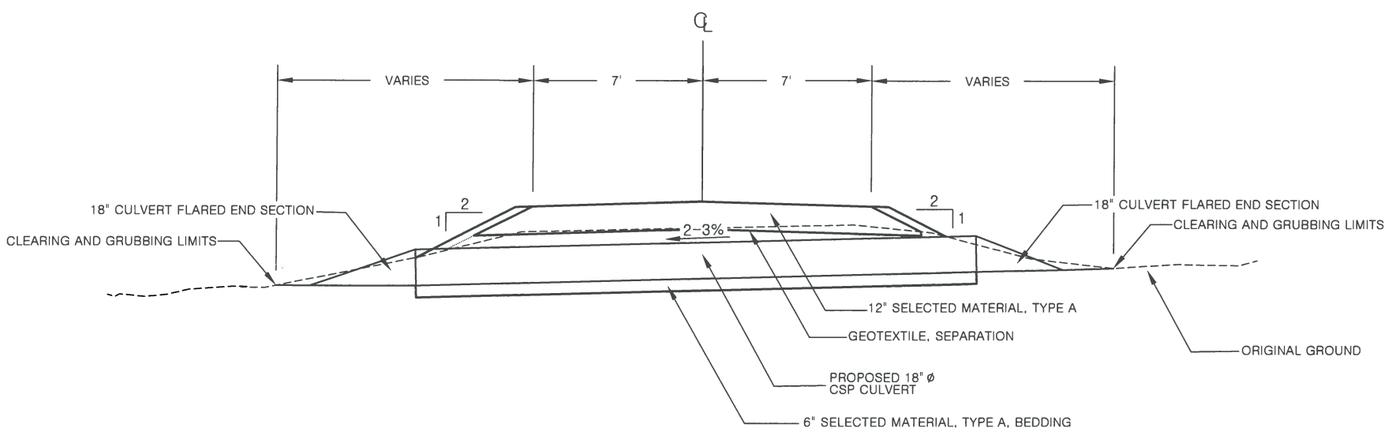

3/5 CULVERT TYPICAL SECTION
WITH CONSTRUCTED ROAD EMBANKMENT

NOTES:
1. CONTRACTOR SHALL RECONDITION EXISTING SURFACE TO MATCH SLOPES OF THE PROPOSED EMBANKMENT PRIOR TO PLACEMENT OF SELECTED MATERIAL, TYPE A.
2. 35' TRANSITIONS TO BE MAINTAINED BETWEEN CONSTRUCTED EMBANKMENT SECTIONS AND EXISTING ROAD SURFACE. THE 35' TRANSITIONS TO BEGIN WITHIN THE RANGE OF CONSTRUCTED EMBANKMENT SECTIONS SHOWN ON SITE TABLE (SHEET 4).
3. RECONDITIONING OF EXISTING SURFACES SCHEDULED FOR EMBANKMENT CONSTRUCTION SHALL BE SUBSIDIARY TO THE PLACEMENT OF SELECTED MATERIAL, TYPE A.

STATE OF ALASKA 49TH Lorett G. Nabors CE – 13306 Registered Professional Engineer 4/13/21

STATE OF ALASKA, DEPARTMENT OF NATURAL RESOURCES
PLANS DEVELOPED BY: DIVISION OF PARKS AND OUTDOOR RECREATION
550 W 7TH AVE. SUITE 1340, ANCHORAGE, AK 99501 - 907.269.8731

TYPICAL SECTIONS

DOF WILLER-KASH ROAD
ACCESS IMPROVEMENTS REBID
PROJECT No. 37107-2

ALASKA STATE PARKS

PREPARED: ROM
DRAWN: ROM
REVIEWED: LGN
DATE: 4/13/2021

SHEET 5 OF 5 SHEETS

D-01.02

SHEET 1 of 1

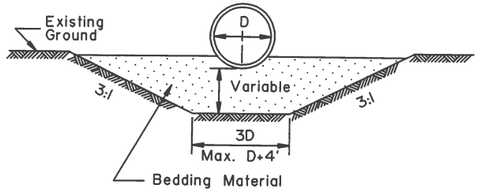

TYPE "A"
FOUNDATION STABILIZATION

To be used in unstable areas as directed by the Engineer.

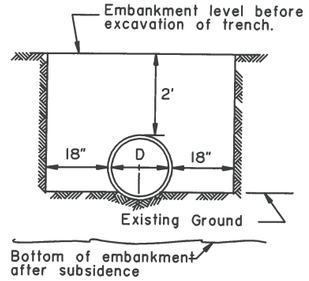

TYPE "B"

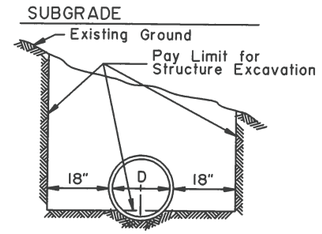

TYPE "C"

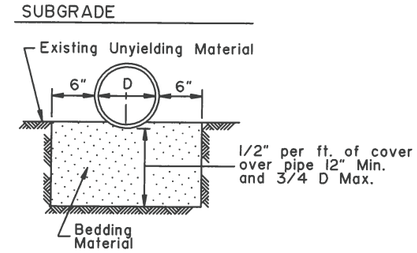

TYPE "D"
ROCK OR UNYIELDING MATERIAL

GENERAL NOTES:

1. Sidefill shall be placed and compacted with care under haunches of pipe and shall be brought up evenly and simultaneously on both sides of pipe to 1 foot above the top of the full length of the pipe.
2. Alternate installation methods may only be used when specified or approved by the Engineer.

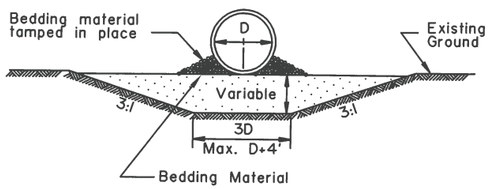

'ALTERNATE'
TYPE "A"
FOUNDATION STABILIZATION

To be used in unstable areas as directed by the Engineer.

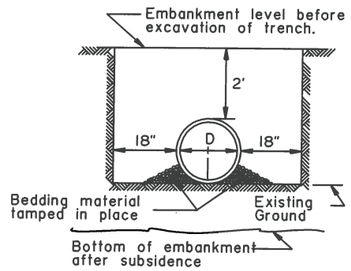

'ALTERNATE'
TYPE "B"

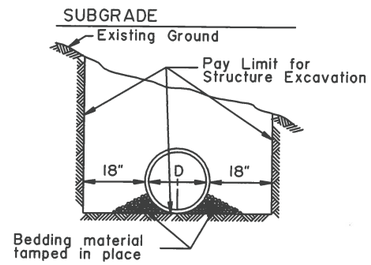

'ALTERNATE'
TYPE "C"

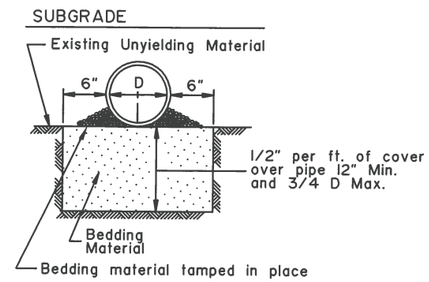

'ALTERNATE' TYPE "D"
ROCK OR UNYIELDING MATERIAL

D = Nominal Pipe Diameter

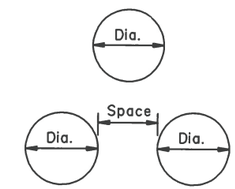

MULTIPLE INSTALLATIONS	
Dia.	Minimum Space Between Pipes
0" - 42"	24"
48" & Over	1/2 Dia. of pipe or 3', whichever is less.

S = Nominal Pipe Arch Span

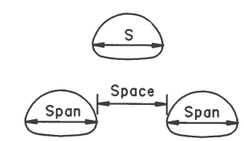

MULTIPLE INSTALLATIONS	
Dia.	Minimum Space Between Pipes
0" - 42"	24"
48" & Over	1/2 Span of pipe arch or 3', whichever is less.

CULVERT PIPE

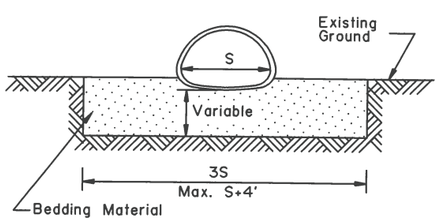

TYPE "A"
FOUNDATION STABILIZATION

To be used in unstable areas as directed by the Engineer.

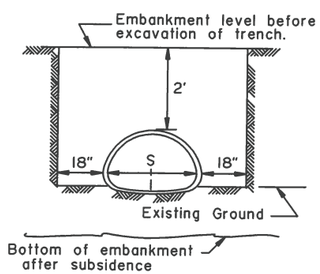

TYPE "B"

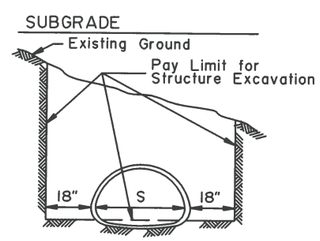

TYPE "C"

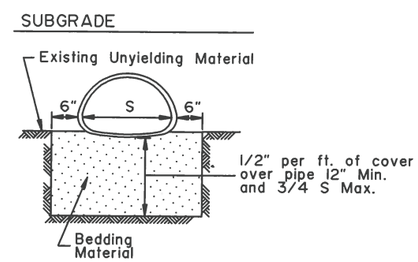

TYPE "D"
ROCK OR UNYIELDING MATERIAL

ARCH

State of Alaska DOT&PF
ALASKA STANDARD PLAN

CULVERT PIPE & ARCH INSTALLATION DETAILS

Adopted as an Alaska Standard Plan by: Kenneth J. Fisher, P.E.
Chief Engineer

Adoption Date: 02/08/2019

Last Code and Stds. Review
By: Date:

Next Code and Standards Review date: 02/08/2029

D-01.02

Minimum & Maximum Cover for 2 2/3" X 1/2" Aluminum Pipe						
Gage		16	14	12	10	8
Thickness		0.060	0.075	0.105	0.135	0.164
Dia. (In)	Min. (In)	Max. (Ft)	Max. (Ft)	Max. (Ft)	Max. (Ft)	Max. (Ft)
12	12	100+	100+	100+	100+	100+
15	12	100	100+	100+	100+	100+
18	12	83	100+	100+	100+	100+
21	12	71	89	100+	100+	100+
24	12	62	78	100+	100+	100+
27	12		69	97	100+	100+
30	12		62	87	100+	100+
36	12		51	73	94	100+
42	12			62	80	100+
48	12			54	70	85
54	15			48	62	76
60	15				52	64
66	18					52
72	18					43

Minimum & Maximum Cover for 3" x 1" Aluminum Pipe						
Gage		16	14	12	10	8
Thickness		0.060	0.075	0.105	0.135	0.164
Dia. (In)	Min. (In)	Max. (Ft)	Max. (Ft)	Max. (Ft)	Max. (Ft)	Max. (Ft)
30	12	57	72	100+	100+	100+
36	12	47	60	84	100+	100+
42	12	40	51	72	96	100+
48	12	35	44	62	84	99
54	15	31	39	55	74	88
60	15	28	35	50	67	79
66	18	25	32	45	61	72
72	18	23	29	41	56	66
78	21		27	38	51	61
84	21			35	48	56
90	24			33	44	52
96	24			31	41	49
102	24				39	46
108	24				37	43
114	24					39
120	24					36

Minimum & Maximum Cover for 9" X 2 1/2" Aluminum Structural Plate Pipe*			
Thickness		0.125	0.150
Dia. (In)	Min. (In)	Max. (Ft)	Max. (Ft)
84	18	31	
90	18	27	
96	18	27	
102	18	24	
108	18	24	
114	18	21	
120	24	21	
126	24	19	
132	30	19	
138	30	18	
144	30	18	
150	30		22
156	30		22
162	36		20
168	36		20

*5.33 - 3/4" dia. steel bolts per foot.

CORRUGATED CIRCULAR ALUMINUM PIPE

CORRUGATED ALUMINUM PIPE-ARCH

Minimum & Maximum Cover for 2 2/3" X 1/2" Aluminum Pipe-Arch					
				2 Tons/Sf Corner Bearing Pressure	
Span (Ft.-In.)	Rise (Ft.-In.)	Corner Radius (In)	Min. Thickness (In)	Min. Cover (In)	Max. Cover (Ft)
17	13	3 4/8	16 (0.060)	12	13
21	15	4 1/8	16 (0.060)	12	12
24	18	4 7/8	16 (0.060)	12	12
28	20	5 4/8	14 (0.075)	12	12
35	24	6 7/8	14 (0.075)	12	12
42	29	8 2/8	12 (0.105)	12	12
49	33	9 5/8	12 (0.105)	15	12
57	38	11	10 (0.135)	15	12
64	43	12 3/8	10 (0.135)	18	12
71	47	13 6/8	8 (0.164)	18	12

Minimum & Maximum Cover for 3" x 1" Aluminum Pipe-Arch					
				2 Tons/Sf Corner Bearing Pressure	
Span (Ft.-In.)	Rise (Ft.-In.)	Corner Radius (In)	Min. Thickness (In)	Min. Cover (In)	Max. Cover (Ft)
60	46	18 6/8	14 (0.075)	15	20
66	51	20 6/8	14 (0.075)	18	20
73	55	22 7/8	14 (0.075)	21	20
81	59	20 7/8	12 (0.105)	21	16
87	63	22 7/8	12 (0.105)	24	16
95	67	24 3/8	12 (0.105)	24	16
103	71	26 1/8	10 (0.135)	24	16
112	75	27 6/8	8 (0.164)	24	16

Minimum & Maximum Cover for 9" x 2 1/2" Aluminum Multiplate Pipe-Arch*					
Span (Ft.-In.)	Rise (Ft.-In.)	Corner Radius (In)	Min. Thickness (In)	Min. Cover (In)	2 Tons/Sf Corner Bearing Pressure Max. Cover (Ft)
6-7	5-8	31.75	0.125	24	24
6-11	5-9	31.75	0.125	24	24
7-3	5-11	31.75	0.125	24	18
7-9	6-0	31.75	0.125	24	18
8-5	6-3	31.75	0.125	24	16
9-3	6-5	31.75	0.125	24	15
10-3	6-9	31.75	0.125	30	13
10-9	6-10	31.75	0.125	30	13
11-5	7-1	31.75	0.125	30	13
12-7	7-5	31.75	0.125	30	11
12-11	7-6	31.75	0.125	30	11
13-1	8-2	31.75	0.125	30	11
13-11	8-5	31.75	0.125	36	10
14-8	9-8	31.75	0.125	36	9
15-4	10-0	31.75	0.150	36	8
16-1	10-4	31.75	0.150	36	8
16-9	10-8	31.75	0.150	42	7
17-3	11-0	31.75	0.150	42	7
18-0	11-4	31.75	0.175	42	7
18-8	11-8	31.75	0.175	42	7

*5.33 - 3/4" dia. steel bolts per foot.

GENERAL NOTES:

1. All material and workmanship shall be in accordance with the State of Alaska, Standard Specifications for Highway Construction.
2. The contractor shall select only pipes that meet specific height of cover criteria shown on the plans or in the special provisions.
3. No more than one type of pipe may be used on any single installation or installation grouping.
4. All structural plate pipes shall be placed on a pre-shaped foundation conforming to the depth of the bottom plates with clearance for assembling to the adjacent plates allowed.
5. See Standard Plan D-01 "Culvert Pipe & Arch Installation Details" for foundation and structural backfill details.
6. Minimum cover shall be measured from the top of pipe to the top of rigid pavement or to the bottom of flexible pavement subgrade. In all cases, the minimum cover shall not be less than 12". Minimum cover during construction shall be that required to protect the pipe from damage or deflection.
7. These tables have been developed for an HL-93 live load and for compacted soil weighing 120 lbs. per cubic foot or less. If compacted soil cover exceeds 120 lbs. per cubic foot, the contractor shall use the depth of cover shown in the plans for the specific pipe. Where compacted soil cover exceeds 120 lbs. per cubic foot and no specific cover requirements are provided in the plans, the contractor shall determine the required minimum pipe cover in accordance with Section 12 of the 2017 AASHTO "LRFD Bridge Design Specifications".

State of Alaska DOT&PF
ALASKA STANDARD PLAN

PIPE AND ARCH TABLES

Adopted as an Alaska Standard Plan by: Carolyn Morehouse
Carolyn Morehouse, P.E.
Chief Engineer

Adoption Date: 7/17/2020

Last Code and Stds. Review
By: KLH Date: 7/8/2020

Next Code and Standards Review date: 7/8/2030

GENERAL NOTES

1. All material and workmanship shall be in accordance with the State of Alaska, Standard Specifications for Highway Construction.
2. The contractor shall select only pipes that meet specific height of cover criteria shown on the plans or in the special provisions.
3. No more than one type of pipe may be used on any single installation or installation grouping.
4. All structural plate pipes shall be placed on a pre-shaped foundation conforming to the depth of the bottom plates with clearance for assembling to the adjacent plates allowed.
5. See Standard Plan D-01 "Culvert Pipe & Arch Installation Details" for foundation and structural backfill details.
6. Minimum cover shall be measured from the top of pipe to the top of rigid pavement or to the bottom of flexible pavement subgrade. In all cases, the minimum cover shall not be less than 12". Minimum cover during construction shall be that required to protect the pipe from damage or deflecton.
7. These tables have been developed for an HL-93 live load and for compacted soil weighing 120 lbs. per cubic foot or less. If compacted soil cover exceeds 120 lbs. per cubic foot, the contractor shall use the depth of cover shown in the plans for the specific pipe. Where compacted soil cover exceeds 120 lbs. per cubic foot and no specific cover requirements are provided in the plans, the contractor shall determine the required minimum pipe cover in accordance with Section 12 of the 2017 AASHTO "LRFD Bridge Design Specifications".

CORRUGATED CIRCULAR STEEL PIPE

Minimum & Maximum Cover for 2 2/3" x 1/2" Steel Pipe

Gage		16	14	12	10	8
Thickness		0.060	0.075	0.105	0.135	0.164
Dia. (In)	Min. (In)	Max. (Ft)	Max. (Ft)	Max. (Ft)	Max. (Ft)	Max. (Ft)
12	12	100+	100+	100+	100+	100+
15	12	100+	100+	100+	100+	100+
18	12	100+	100+	100+	100+	100+
21	12	100+	100+	100+	100+	100+
24	12	100+	100+	100+	100+	100+
30	12	83	100+	100+	100+	100+
36	12	69	86	100+	100+	100+
42	12	59	74	100+	100+	100+
48	12	51	64	91	100+	100+
54	12		57	80	100+	100+
60	12			72	93	100+
66	12			66	85	100+
72	12				78	95
78	12					84
84	12					73

Minimum & Maximum Cover fo 3" x 1" Steel Pipe

Gage		16	14	12	10	8
Thickness		0.060	0.075	0.105	0.135	0.164
Dia. (In)	Min. (In)	Max. (Ft)	Max. (Ft)	Max. (Ft)	Max. (Ft)	Max. (Ft)
36	12			100+	100+	100+
42	12			100+	100+	100+
48	12		74	100+	100+	100+
54	12	53	66	93	100+	100+
60	12	47	59	83	100+	100+
66	12	43	54	76	98	100+
72	12	39	49	69	89	100+
78	12	36	45	64	82	100+
84	12	33	42	59	77	94
90	12	31	39	55	71	87
96	12	29	37	52	67	82
102	18	27	34	49	63	77
108	18		32	46	59	73
114	18		31	43	56	69
120	18		29	41	53	65
126	18			39	51	62
132	18			37	48	59
138	18			36	46	57
144	18				44	54

Minimum & Maximum Cover for 5" x 1" Steel Pipe

Gage		16	14	12	10	8
Thickness		0.060	0.075	0.105	0.135	0.164
Dia. (In)	Min. (In)	Max. (Ft)	Max. (Ft)	Max. (Ft)	Max. (Ft)	Max. (Ft)
36	12	71	88	100+	100+	100+
42	12	60	76	100+	100+	100+
48	12	53	66	93	100+	100+
54	12	47	59	82	100+	100+
60	12	42	53	74	96	100+
66	12	38	48	67	87	100+
72	12	35	44	62	79	97
78	12	32	40	57	73	90
84	12	30	37	53	68	83
90	12	28	35	49	63	78
96	12	26	33	46	59	73
102	18	24	31	43	56	69
108	18		29	41	53	65
114	18		27	39	50	61
120	18		26	37	47	58
126	18			35	45	55
132	18			33	43	53
138	18			32	41	50
144	18				39	48

Minimum & Maximum Cover for 6" x 2" Steel Multiplate Pipe*

Gage		12	10	8	7	5	3	1
Thickness		0.111	0.140	0.170	0.188	0.218	0.249	0.280
Dia. (In)	Min. (In)	Max. (Ft)	Max. (Ft)	Max. (Ft)	Max. (Ft)	Max. (Ft)	Max. (Ft)	Max. (Ft)
60	12	46	67	87	100	100+	100+	100+
66	12	42	60	79	91	100+	100+	100+
72	12	38	55	73	83	100+	100+	100+
78	12	35	51	67	77	93	100+	100+
84	12	32	47	62	71	86	100+	100+
90	12	30	44	58	67	80	95	100+
96	12	28	41	54	62	75	89	97
102	18	27	39	51	59	71	84	91
108	18	25	37	48	55	67	79	86
114	18	24	35	45	52	63	75	82
120	18	22	33	43	50	60	71	77
126	18	21	31	41	47	57	68	74
132	18	20	30	39	45	54	64	70
138	18	19	28	37	43	52	62	67
144	18	18	27	36	41	50	59	64

*4 - 3/4" dia. steel bolts per foot.

CORRUGATED STEEL PIPE-ARCH

Minimum & Maximum Cover for 2 2/3"X 1/2"Steel Pipe-Arch

			2 Tons/Sf Corner Bearing Pressure		
Span (Ft.-In.)	Rise (Ft.-In.)	Corner Radius (In)	Min. Thickness (In)	Min. Cover (In)	Max. Cover (Ft)
17	13	3 4/8	16 (0.060)	12	11
21	15	4 1/8	16 (0.060)	12	11
24	18	4 7/8	16 (0.060)	12	11
28	20	5 4/8	16 (0.060)	12	11
35	24	6 7/8	16 (0.060)	12	11
42	29	8 2/8	16 (0.060)	12	11
49	33	9 5/8	14 (0.075)	12	11
57	38	11	12 (0.109)	12	11
64	43	12 3/8	12 (0.109)	12	11
71	47	13 6/8	10 (0.138)	12	11
77	52	15 1/8	10 (0.138)	12	11
83	57	16 4/8	8 (0.168)	12	11

Minimum & Maximum Cover for 3"X 1"Steel Pipe-Arch

			2 Tons/Sf Corner Bearing Pressure		
Span (Ft.-In.)	Rise (Ft.-In.)	Corner Radius (In)	Min. Thickness (In)	Min. Cover (In)	Max. Cover (Ft)
53	41	10 2/8	14 (0.079)	12	10
60	46	18 6/8	14 (0.079)	15	29
66	51	20 6/8	14 (0.079)	15	29
73	55	22 7/8	14 (0.079)	18	18
81	59	20 7/8	14 (0.079)	18	15
87	63	22 7/8	14 (0.079)	18	15
95	67	24 3/8	14 (0.079)	18	15
103	71	26 1/8	14 (0.079)	18	14
112	75	27 6/8	14 (0.079)	21	14
117	79	29 4/8	12 (0.109)	21	14
128	83	31 2/8	10 (0.138)	24	14
137	87	33	10 (0.138)	24	14
142	91	34 6/8	10 (0.138)	24	13
150	96	36	10 (0.138)	30	13
157	96	38	10 (0.138)	30	13
164	105	40	10 (0.138)	30	14
171	110	41	10 (0.138)	30	13

Minimum & Maximum Cover for 5"X 1"Steel Pipe-Arch

			2 Tons/Sf Corner Bearing Pressure		
Span (Ft.-In.)	Rise (Ft.-In.)	Corner Radius (In)	Min. Thickness (In)	Min. Cover (In)	Max. Cover (Ft)
53	41	10 2/8	14 (0.079)	12	10
60	46	18 6/8	14 (0.079)	15	29
66	51	20 6/8	14 (0.079)	15	29
73	55	22 7/8	14 (0.079)	18	18
81	59	20 7/8	14 (0.079)	18	15
87	63	22 7/8	14 (0.079)	18	15
95	67	24 3/8	14 (0.079)	18	15
103	71	26 1/8	14 (0.079)	18	14
112	75	27 6/8	14 (0.079)	21	14
117	79	29 4/8	12 (0.109)	21	14
128	83	31 2/8	10 (0.138)	24	14
137	87	33	10 (0.138)	24	14
142	91	34 6/8	10 (0.138)	24	13
150	96	36	10 (0.138)	30	13
157	96	38	10 (0.138)	30	13
164	105	40	10 (0.138)	30	14
171	110	41	10 (0.138)	30	13

Minimum & Maximum Cover for Steel Multiplate Pipe-Arch 6" x 2" *

			2 Tons/Sf Corner Bearing Pressure		
Span (Ft.-In.)	Rise (Ft.-In.)	Corner Radius (In)	Min. Gage (In)	Min. Cover (In)	Max. Cover (Ft)
6-1	4-7	18	12 (0.111)	12	14
7-0	5-1	18	12 (0.111)	12	12
7-11	5-7	18	12 (0.111)	12	10
8-10	6-1	18	12 (0.111)	18	9
9-9	6-7	18	12 (0.111)	18	8
10-11	7-1	18	12 (0.111)	18	6
11-10	7-7	18	12 (0.111)	18	5
12-10	8-4	18	12 (0.111)	24	5
13-3	9-4	31	10 (0.140)	24	11
14-2	9-10	31	10 (0.140)	24	10
15-4	10-4	31	10 (0.140)	24	9
16-3	10-10	31	10 (0.140)	30	8
17-2	11-4	31	10 (0.140)	30	8
18-1	11-10	31	10 (0.140)	30	7
19-3	12-4	31	10 (0.140)	30	7
19-11	12-10	31	10 (0.140)	30	6
20-7	13-2	31	10 (0.140)	36	6

*4 - 3/4" dia. steel bolts per foot.

State of Alaska DOT&PF
ALASKA STANDARD PLAN

PIPE AND ARCH TABLES

Adopted as an Alaska Standard Plan by: Carolyn Morehouse
Carolyn Morehouse, P.E.
Chief Engineer

Adoption Date: 7/17/2020

Last Code and Stds. Review
By: KLH Date: 7/8/2020

Next Code and Standards Review date: 7/8/2030

Maximum Cover for Type S Corrugated Polyethelene Pipe	
Size (in)	Max. Cover (ft)
12	24
15	25
18	24
24	20
30	20
36	18
42	16
48	17

GENERAL NOTES

1. All materials and workmanship shall be in accordance with the State of Alaska Standard Specifications for Highway Construction.

2. For foundation and structural backfill details see Standard Plan D-01 "Culvert Pipe & Arch Installation Details".

3. Pipe cover height is measured from top of the pipe to top of rigid pavement, or to the bottom of subgrade for flexible pavement. In all cases the minimum cover shall be no less than 2 ft. Where loads traverse the culvert during construction minimum cover shall be no less than 4 ft.

State of Alaska DOT&PF
ALASKA STANDARD PLAN

PIPE AND ARCH TABLES

Adopted as an Alaska Standard Plan by: Carolyn Morehouse

Carolyn Morehouse, P.E.
Chief Engineer

Adoption Date: 7/17/2020

Last Code and Stds. Review
By: KLH Date: 7/8/2020

Next Code and Standards Review date: 7/8/2030

Minimum & Maximum Cover for Aluminum Spiral Rib Circular Pipe*					
Gage		16	14	12	10
Thickness		0.064	0.079	0.109	0.138
Dia. (In)	Min. (In)	Max. (Ft)	Max. (Ft)	Max. (Ft)	Max. (Ft)
18	12	43	61		
21	12	38	52	84	
24	12	33	45	73	
30	15	26	36	58	
36	18	21	30	49	69
42	21		25	41	59
48	24			36	51
54	24			32	46
60	24			29	41
66	24				37
72	30				34

*¾ x ¾ x 7½ in. Corrugations

Minimum & Maximum Cover for Aluminum Spiral Rib Pipe-Arch*						
Gage			16	14	12	10
Thickness			0.060	0.075	0.105	0.135
Span (Ft.-In.)	Rise (Ft.-In.)	Min. Cover (In)	Max. Cover (Ft)			
20	16	12	16			
23	19	12	15			
27	21	15	13	13		
33	26	18	13	13	13	
40	31	21		13	13	
46	36	24			13	13
53	41	24			13	13
60	46	24			13	13
66	51	24				13

*¾ x ¾ x 7½ in. Corrugations

ALUMINUM SPIRAL RIB PIPE

STEEL SPIRAL RIB PIPE

Minimum & Maximum Cover for Steel and Aluminized Steel Spiral Rib Circular Pipe*					
Gage		16	14	12	10
Thickness		0.064	0.079	0.109	0.138
Dia. (In)	Min. (In)	Max. (Ft)	Max. (Ft)	Max. (Ft)	Max. (Ft)
18	12	91			
24	12	68	95	100+	
30	12	54	76	100+	
36	12	45	63	100+	
42	12	38	54	90	
48	12	33	47	79	
54	18	30	42	70	
60	18	27	38	63	92
66	18	24	34	57	83
72	18		31	52	76
78	24		29	48	70
84	24		27	45	65
90	24			42	61
96	24			39	56
102	30			36	50
108	30			32	45

*¾ x ¾ x 7½ in. Corrugations.

Minimum & Maximum Cover for Steel Spiral Rib Pipe-Arch*					
			2 Tons/Sf Corner Bearing Pressure		
Thickness			0.064	0.079	0.109
Span (Ft.-In.)	Rise (Ft.-In.)	Min. Cover (In)	Max. Cover (Ft)		
20	16	12	13		
23	19	12	13		
27	21	12	11		
33	26	12	11		
40	31	12	11		
46	36	12	11		
53	41	18		11	
60	46	18		19	
66	51	18		19	
73	55	18			18
81	59	18			15
87	63	18			15
95	67	18			15

*¾ x ¾ x 7½ in. Corrugations

GENERAL NOTES

1. All material and workmanship shall be in accordance with the State of Alaska, Standard Specifications for Highway Construction.
2. The contractor shall select only pipes that meet specific height of cover criteria shown on the plans or in the special provisions.
3. No more than one type of pipe may be used on any single installation or installation grouping.
4. All structural plate pipes shall be placed on a pre-shaped foundation conforming to the depth of the bottom plates with clearance for assembling to the adjacent plates allowed.
5. See Standard Plan D-01 "Culvert Pipe & Arch Installation Details" for foundation and structural backfill details.
6. Minimum cover shall be measured from the top of pipe to the top of rigid pavement or to the bottom of flexible pavement subgrade. In all cases, the minimum cover shall not be less than 12". Minimum cover during construction shall be that required to protect the pipe from damage or deflecton.
7. These tables have been developed for an HL-93 live load and for compacted soil weighing 120 lbs. per cubic foot or less. If compacted soil cover exceeds 120 lbs. per cubic foot, the contractor shall use the depth of cover shown in the plans for the specific pipe. Where compacted soil cover exceeds 120 lbs. per cubic foot and no specific cover requirements are provided in the plans, the contractor shall determine the required minimum pipe cover in accordance with Section 12 of the 2017 AASHTO "LRFD Bridge Design Specifications".

State of Alaska DOT&PF
ALASKA STANDARD PLAN

PIPE AND ARCH TABLES

Adopted as an Alaska Standard Plan by: Carolyn Morehouse

Carolyn Morehouse, P.E.
Chief Engineer

Adoption Date: 7/17/2020

Last Code and Stds. Review
By: KLH Date: 7/8/2020

Next Code and Standards Review date: 7/8/2030

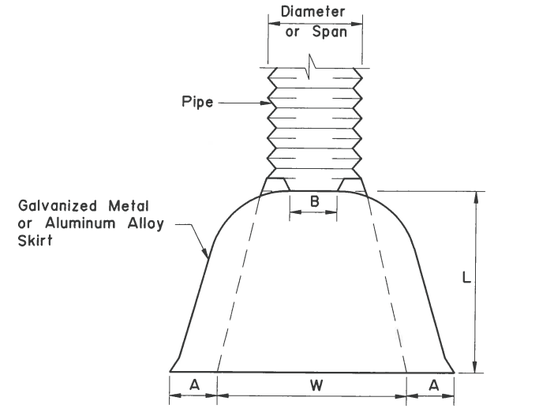

PLAN

ROUND AND PIPE ARCH

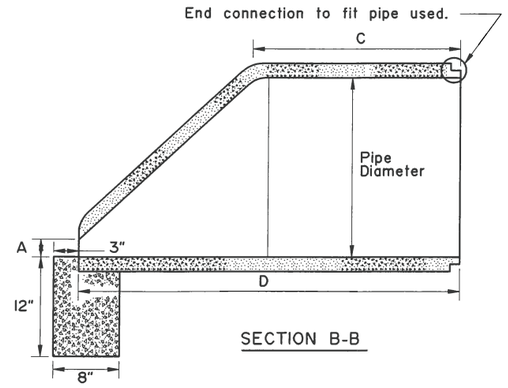

SECTION B-B

MINIMUM DIMENSIONS					
Pipe Diameter	A	B	C	D	E
12"	4"	1 3/4"	24"	46"	24"
18"	9"	2"	25"	50"	36"
24"	9 1/2"	2 1/2"	30"	72"	48"
30"	12"	3"	20"	73"	60"
36"	15"	3 3/8"	35"	97"	72"
42"	21"	3 3/4"	35"	98"	78"
48"	24"	4 1/4"	26"	98"	84"
54"	27"	4 5/8"	33"	99"	82"

ROUND PIPE										
Pipe Diam. Inches	Thickness For Aluminum	Thk. for Galv. Metal	Dimension Inches						Skirt	Approx. Slope
			A 1" Tol.	B Max.	H 1" Tol.	L 1 1/2" Tol.	W 2" Tol.	T 2" Tol.		
12"	0.060	0.064	6"	6"	6"	21"	24"	34"	1 Pc.	2 1/2
15"	0.060	0.064	7"	8"	6"	26"	30"	40"	1 Pc.	2 1/2
18"	0.060	0.064	8"	10"	6"	31"	36"	46"	1 Pc.	2 1/2
21"	0.060	0.064	9"	12"	6"	36"	42"	52"	1 Pc.	2 1/2
24"	0.075	0.064	10"	13"	6"	41"	48"	58"	1 Pc.	2 1/2
30"	0.075	0.079	12"	16"	8"	51"	60"	70"	1 Pc.	2 1/2
36"	0.105	0.079	14"	19"	9"	60"	72"	94"	2 Pc.	2 1/2
42"	0.105	0.109	16"	22"	11"	69"	84"	106"	2 Pc.	2 1/2
48"	0.105	0.109	18"	27"	12"	78"	90"	112"	2 Pc.	2 1/4
54"	0.105	0.109	18"	30"	12"	84"	102"	122"	2 Pc.	2 1/4
60"	0.135	0.109	18"	33"	12"	87"	114"	134"	3 Pc.	2 1/4
66"	0.135	0.109	18"	36"	12"	87"	120"	142"	3 Pc.	2 1/4
72"	0.135	0.109	18"	39"	12"	87"	126"	146"	3 Pc.	2 1/4
78"	— —	0.109	18"	42"	12"	87"	132"	152"	3 Pc.	1 1/4
84"	— —	0.109	18"	45"	12"	87"	138"	158"	3 Pc.	1 1/6

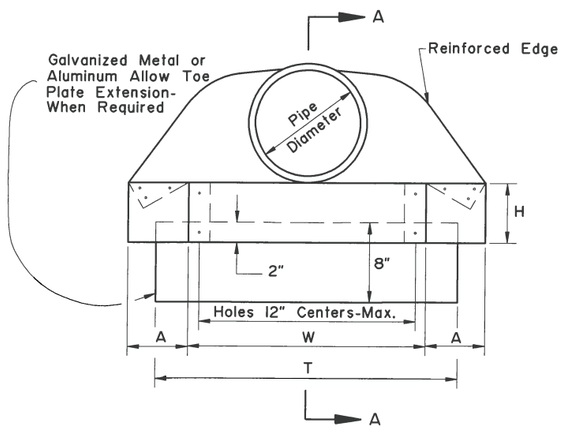

ELEVATION

ROUND PIPE

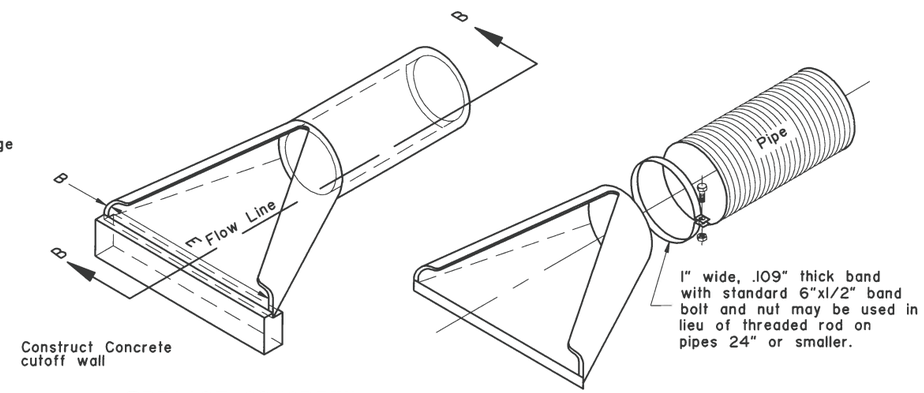

PRECAST CONCRETE END SECTION

PIPE-ARCH											
Pipe-Arch Dimension Inches		Thickness for Aluminum	Thk. for Galv. Metal	Dimension Inches						Skirt	Approx. Slope
Span	Rise			A 1" Tol.	B Max.	H 1" Tol.	L 1 1/2" Tol.	W 2" Tol.	T 2" Tol.		
17"	13"	0.060	0.064	7"	9"	6"	19"	30"	40"	1 Pc.	2 1/2
21"	15"	0.060	0.064	7"	10"	6"	23"	36"	46"	1 Pc.	2 1/2
24"	18"	0.060	0.064	8"	12"	6"	28"	42"	52"	1 Pc.	2 1/2
28"	20"	0.075	0.064	9"	14"	6"	32"	48"	58"	1 Pc.	2 1/2
35"	24"	0.075	0.079	10"	16"	6"	39"	60"	70"	1 Pc.	2 1/2
42"	29"	0.105	0.079	12"	18"	8"	46"	75"	85"	1 Pc.	2 1/2
49"	33"	0.105	0.109	13"	21"	9"	53"	85"	103"	2 Pc.	2 1/2
57"	38"	0.105	0.109	18"	26"	12"	63"	90"	114"	2 Pc.	2 1/2
64"	43"	0.105	0.109	18"	30"	12"	70"	102"	130"	2 Pc.	2 1/4
71"	47"	0.135	0.109	18"	33"	12"	77"	114"	144"	3 Pc.	2 1/4
77"	52"	0.135	0.109	18"	36"	12"	84"	120"	158"	3 Pc.	2 1/4
83"	57"	0.135	0.109	18"	39"	12"	90"	126"	170"	3 Pc.	2 1/4

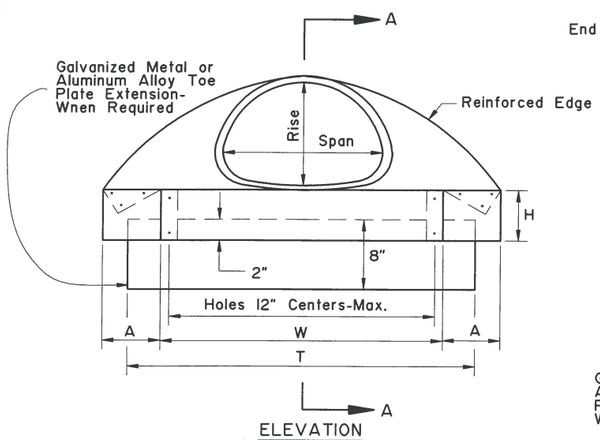

ELEVATION

PIPE ARCH

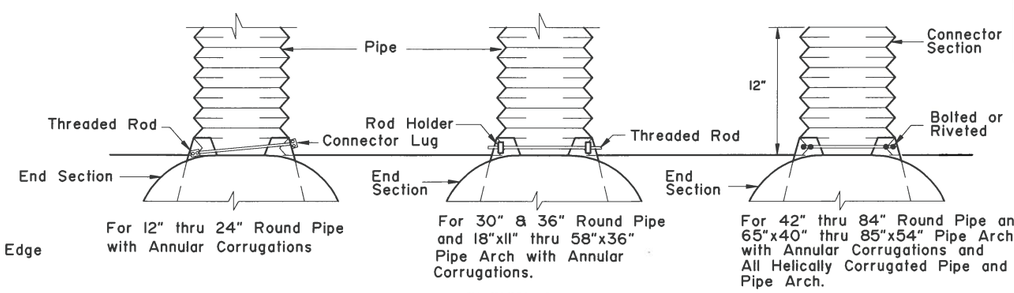

For 12" thru 24" Round Pipe with Annular Corrugations

For 30" & 36" Round Pipe and 18"x11" thru 58"x36" Pipe Arch with Annular Corrugations.

For 42" thru 84" Round Pipe and 65"x40" thru 85"x54" Pipe Arch with Annular Corrugations and All Helically Corrugated Pipe and Pipe Arch.

DESIGN A

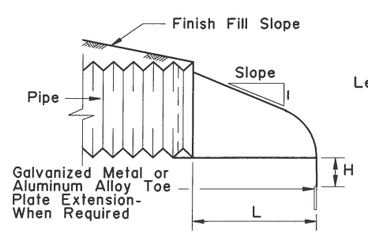

SECTION A-A

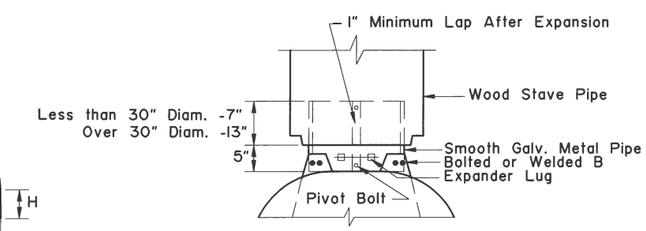

DESIGN B

METAL END SECTION CONNECTED TO WOOD STAVE PIPE

GENERAL NOTES:

1. Toe plate extensions will be required only when provided for on the plans. When required, the toe plate extensions shall be punched with holes to match those in lip of skirt and fastened with 3/8 inch or larger galvanized nuts and bolts and shall be the same gage as the end section.
2. Galvanized Metal or Aluminum Alloy End Sections may be used on Wood Stave and Plastic Pipe.
3. All 3 piece bodies shall have 12 gage sides and 10 gage center panels. Multiple panel bodies shall have lap seams which are to be tightly joined by 3/8" galvanized rivets or bolts.

State of Alaska DOT&PF
ALASKA STANDARD PLAN

CULVERT END SECTIONS

Adopted as an Alaska Standard Plan by: Kenneth J. Fisher, P.E. Chief Engineer

Adoption Date: 02/08/2019

Last Code and Stds. Review
By: Date:

Next Code and Standards Review date: 02/08/2029

GENERAL NOTES

1. See general notes on sheet 1 of 3.
2. See sheet 1 of 3 for metal end section dimensions.
3. Insert bolts, washers and rivets shall be galvanized. Insert thickness is the same as the end section.
4. Use culvert inserts only at inlet.

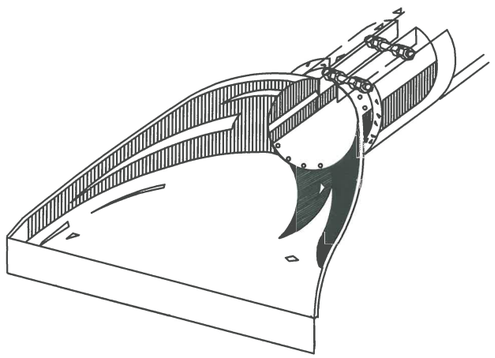

FOR CONNECTING CONCRETE PIPE OR CORRUGATED POLYETHYLENE PIPE TO METAL END SECTION.

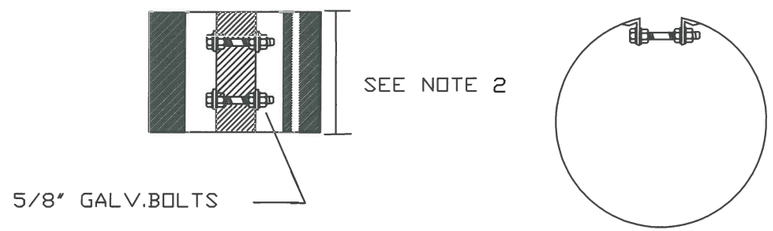

METAL INSERTS FOR USE WITH CORRUGATED PLASTIC PIPE AND METAL END SECTIONS

State of Alaska DOT&PF
ALASKA STANDARD PLAN

CULVERT END SECTIONS

Adopted as an Alaska Standard Plan by: Kenneth J. Fisher, P.E.
Chief Engineer

Adoption Date: 02/08/2019

Last Code and Stds. Review
By: Date:

Next Code and Standards Review date: 02/08/2029

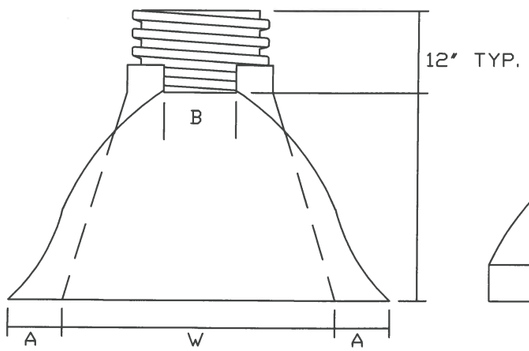

TOP VIEW

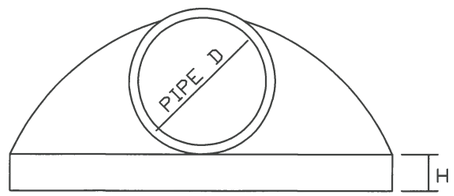

END VIEW

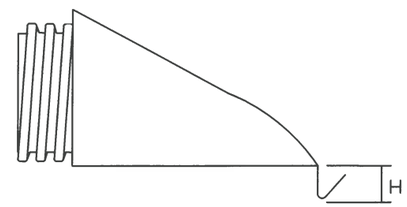

SIDE VIEW

PIPE DIAMETER	DIMENSIONS IN MILLIMETERS				
	A(1"±)	B MAX	H(1"±)	L(1/2"±)	W(2"±)
12" and 15"	6 1/2"	10"	6 1/2"	25"	29"
18"	7 1/2"	15"	6 1/2"	32"	35"
24"	7 1/2"	18"	6 1/2"	36"	45"
30"	10 1/2"	N/A	7"	53"	68"
36"	10 1/2"	N/A	7"	53"	68"

PLASTIC END SECTION FOR CORRUGATED PLASTIC PIPE

GENERAL NOTES

1. Plastic flared end sections may be used with HDPE corrugated culvert pipes where noted in project plans or approved by project engineer.
2. Consult manufacturer's recommendations for proper sizing and coupling devices. Recommended fasteners may include connecting bands or cinch ties. Fittings across dimension B may include threaded rods with wing nuts or bolts and washers. plastic welds may be recommended.
3. Align coupling to accomodate pipe corrugations.
4. Metal components e.g. bolts or washers must be galvanized.
5. Attachment of end section should preserve culvert alignment and not impair pipe function. Use end sections only on culvert inlet.
6. Toe plate extensions will be required only when designated on the plans.
7. End sections will not be used on HDPE culvert pipes larger than 36" unless indicated by project plans or approved by the Engineer.

State of Alaska DOT&PF
ALASKA STANDARD PLAN

CULVERT END SECTIONS

Adopted as an Alaska Standard Plan by: Kenneth J. Fisher, P.E.
Chief Engineer

Adoption Date: 02/08/2019

Last Code and Stds. Review
By: Date:

Next Code and Standards Review date: 02/08/2029

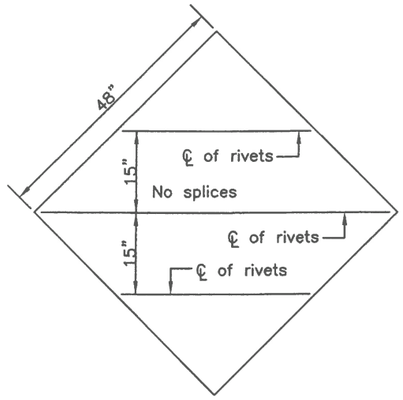

TUBE SIGN POST SPACING								
Sign Width (feet)	No. of Posts	Distance Between Posts	Sign Overhang	Post Type				Notes
				P.S.T.	Wood	Steel Tube	W-Shape	
0.5 to 4.0	1	–	0.5W	X	X	X		See Note 2.
4.5 to 10.0	2	0.6W	0.2W	X	X	X		See Note 3.
10.5 to 11.0	2	6	Varies	X	X	X		See Note 3.
11.5 to 13.0	2	8	Varies				X	
13.5 to 20.0	2	0.6W	0.2W				X	
20.5 to 22.5	3	8	Varies				X	
23.0 to 29.5	3	0.35W	0.15W				X	
30.0 to 31.5	4	8	Varies				X	
32.0 to 40.0	4	0.25W	0.125W				X	

SIGN POST SPACING NOTES:

1. Install sign support in accordance with the table above, unless otherwise required by plans or specifications.
2. Exceptions:
   a. Use one post for all E5-1 gore signs, regardless of width.
   b. Use one 2.5" P.S.T. for all STOP signs, with or without street name signs.
3. Supports placed within 7' of each other must be acceptable for that use. See Standard Drawing S-30 for the sizes of wood posts and P.S.T.s that may be used within 7'. See Manufacturer's documentation for breakaway couplings and tubes that may be used within 7'.
4. See Standard Drawing S-31 for frangible couplings, hinges, and foundations for tube and W-shape sign supports.

GENERAL NOTES

1. See the standard specifications for the aluminum alloys that you may use for sign sheeting and wind framing members.
2. Fabricate all signs from 0.125" thick aluminum sheeting.
3. Sign fabricators may use alternates to the zee shaped framing member with approval of the engineer, if the frame manufacturer certifies their design equals or exceeds the strength of the zee shaped design.
4. Install one piece wind framing members on all signs up to 23.5' wide. Use one splice in each wind frame on all signs wider than 23.5'. Locate splices at least 18" from all posts and panel edges. Stagger splices in adjacent framing members at least 8.0' apart.
5. Attach wind framing members with rivets or with an engineer approved, double sided, high strength, adhesive tape. Clean and handle sheeting and framing members and apply tape in accordance with the tape manufacturer's written instructions. Install two rivets in both ends of each framing member.
6. Use 3/16" diameter rivets conforming to aluminum alloy 6061-T6 for cold driven rivets, or aluminum alloy 6061-T43 for hot driven rivets.
7. Sign fabricators may use sign panels extruded with integral framing with approval of the engineer, if the manufacturer certifies their design equals or exceeds the strength of the 0.125" thick panel with framing attached to it.
8. Frame all signs taller than 8.0' with five wind framing members located (H-0.15)/4 spaces. If needed, make a horizontal splice at the middle wind frame.
9. Do not use round pipes for sign supports.

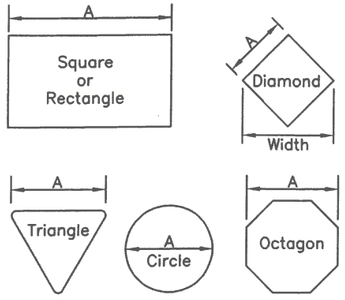

Maximum size unframed signs using 0.125" thick aluminum sheeting.	
Sign Shape	A
Squares, Shields, and Route Markers	48"
Rectangles	48"
Diamonds	48"
Triangles	48"
Rounds and Octagons	48"

Install wind framing on all signs that exceed the dimensions listed.

LIGHT SIGNS

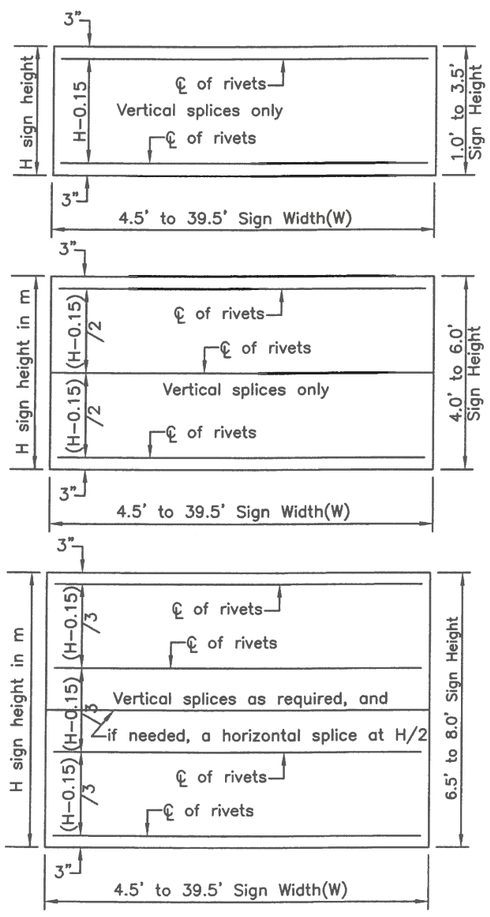

WIND FRAMING LOCATIONS

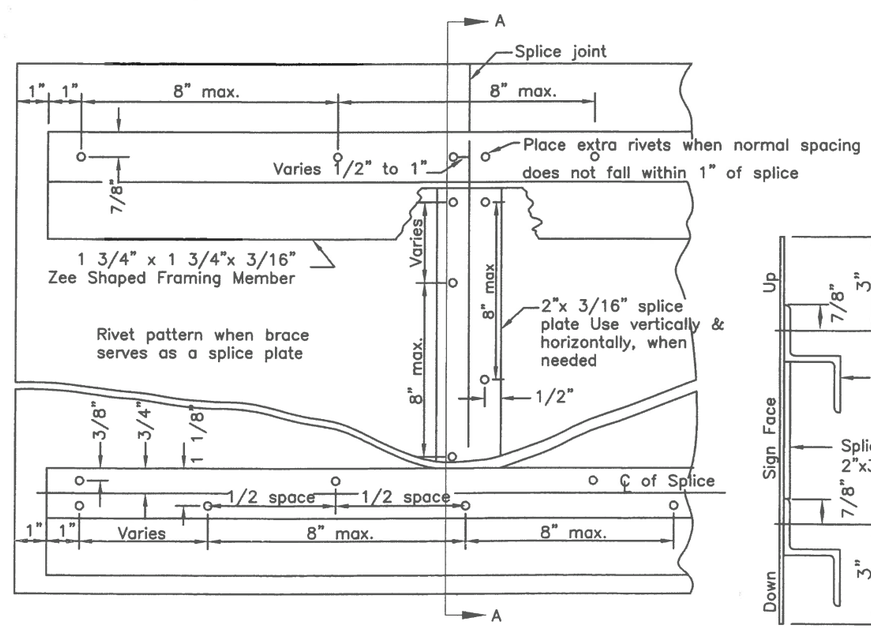

RIVET DETAIL FOR ZEE SHAPED WIND FRAMING & SPLICE PLATE

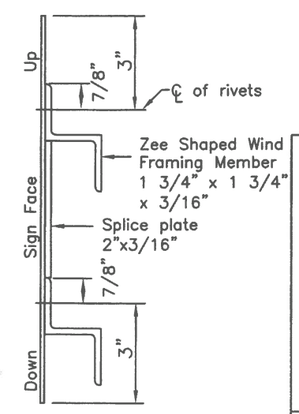

SECTION A-A

State of Alaska DOT&PF
ALASKA STANDARD PLAN

SIGN FRAMING AND POST SPACING

Adopted as an Alaska Standard Plan by: Kenneth J. Fisher, P.E.
Chief Engineer

Adoption Date: 02/08/2019

Last Code and Stds. Review
By: Date:

Next Code and Standards Review date:02/08/2029

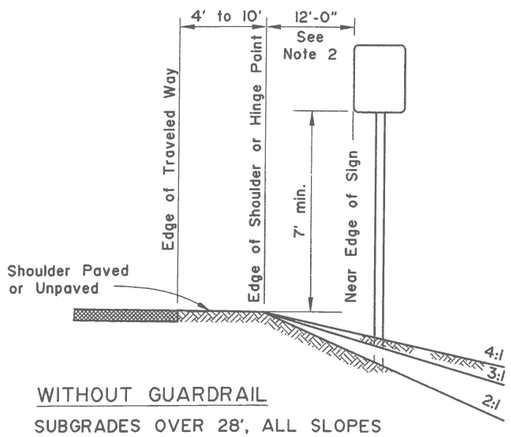

WITHOUT GUARDRAIL

SUBGRADES OVER 28', ALL SLOPES

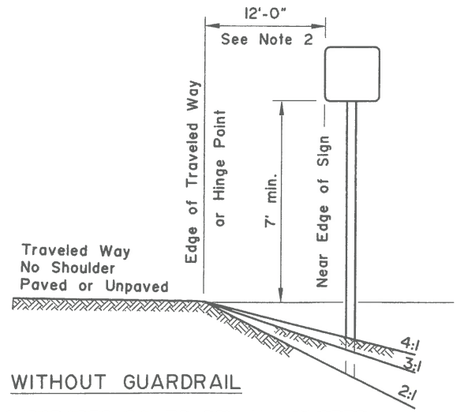

WITHOUT GUARDRAIL

SUBGRADES 24' TO 28', ALL SLOPES

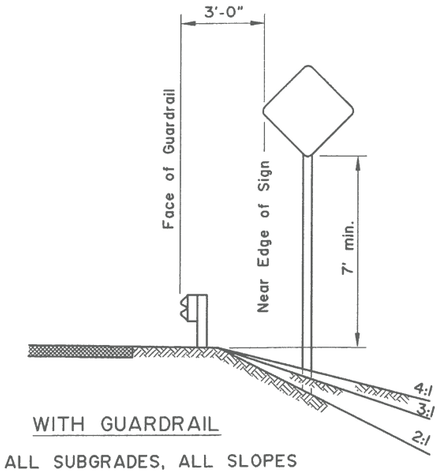

WITH GUARDRAIL

ALL SUBGRADES, ALL SLOPES

GENERAL NOTES

1. Unless shown otherwise on the plans, the standard sign offset is 12'. The minimum is 6'.
2. If signs extend over sidewalks, the minimum vertical clearance is 7'-0".
3. Add 6" to mounting height on unpaved roads.
4. If signs extend over bike paths, the minimum vertical clearance is 8' 0".
5. When signs are placed 30' or more from the edge of traveled way, mount them with the bottom of the sign at least 5' above the road surface at the near edge of the road.
6. When multiple hinged sign supports are used, mount hinges at least 7' above the ground.

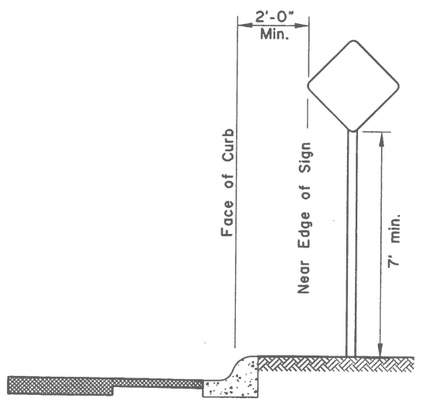

CURB WITHOUT SIDEWALK

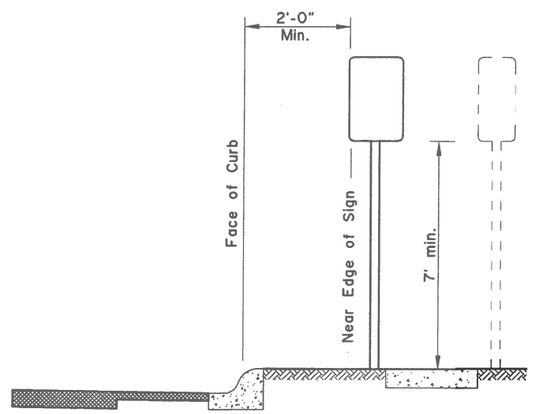

CURB WITH PARKWAY AND SIDEWALK

(If R/W width permits, signs should be placed behind sidewalk.)

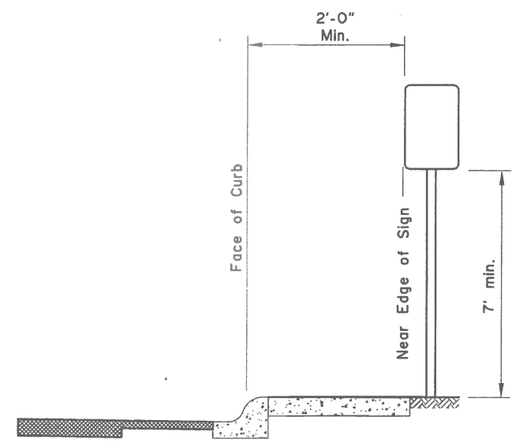

CURB WITH SIDEWALK WITHOUT PARKWAY

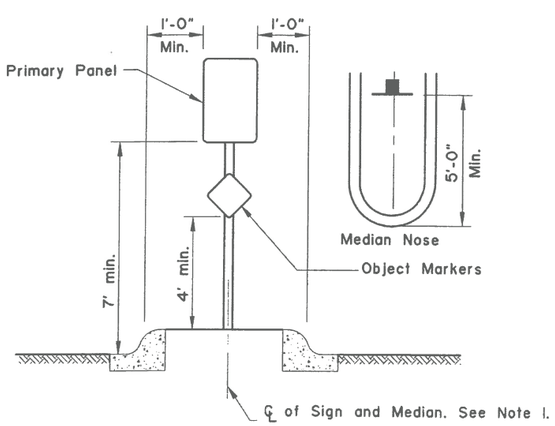

RAISED MEDIANS

Minimum 4' Width for Signing

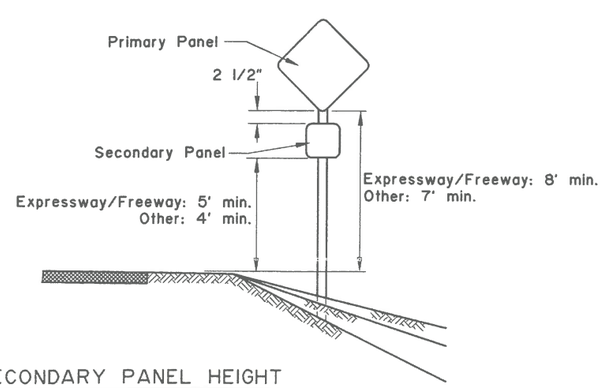

SECONDARY PANEL HEIGHT

ALL TWO PANEL MOUNTING

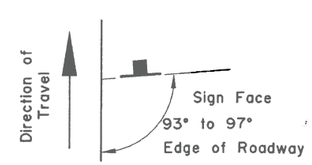

SIGN POSITIONING

State of Alaska DOT&PF
ALASKA STANDARD PLAN

POST MOUNTED SIGN OFFSET AND HEIGHT

Adopted as an Alaska Standard Plan by: Kenneth J. Fisher, P.E. Chief Engineer

Adoption Date: 02/08/2019

Last Code and Stds. Review
By: Date:

Next Code and Standards Review date: 02/08/2029

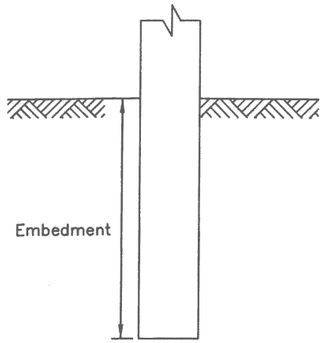

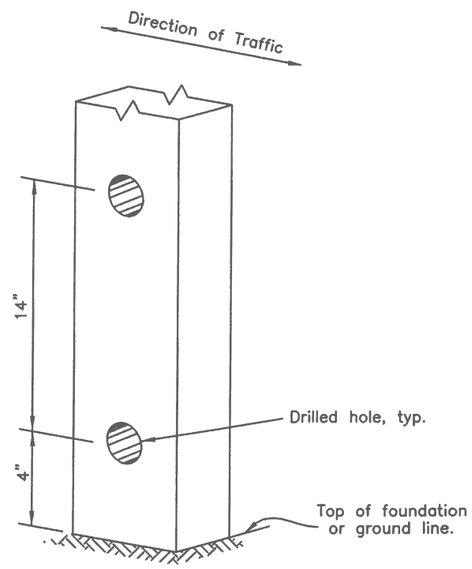

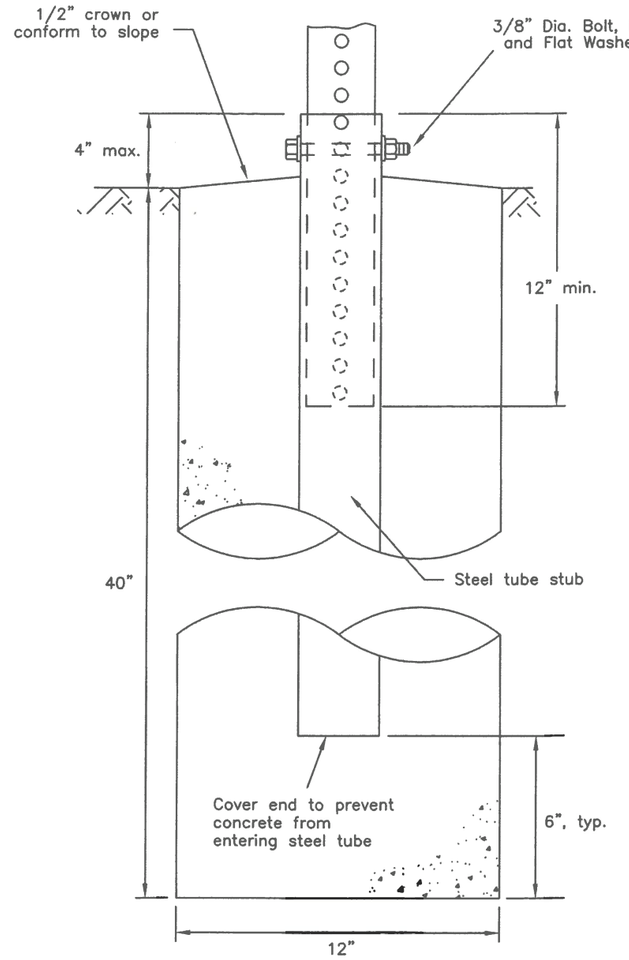

SLEEVE TYPE
CONCRETE FOUNDATION

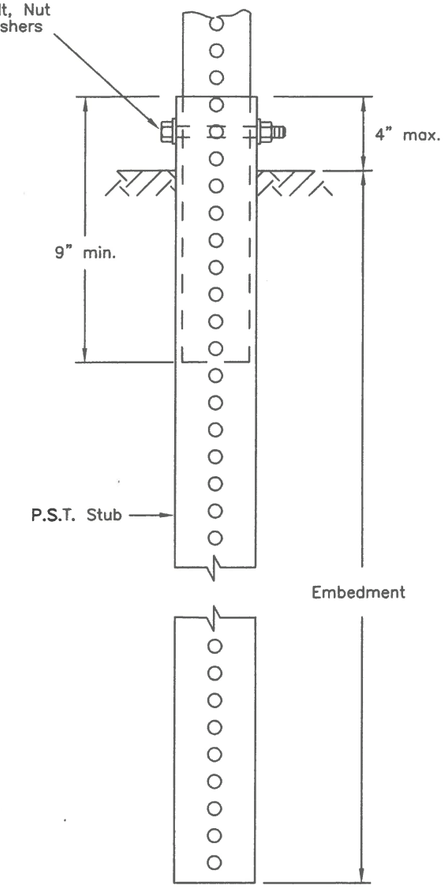

SLEEVE TYPE *
SOIL EMBEDMENT

WOOD SIGN POSTS			
SIZE	HOLE DIA.	EMBEDMENT*	NO. OF POSTS WITHIN 7 Ft. PATH
4"x4"	NONE	36"	2
4"x6"	1 1/2"	36"	2
6"x6"	1 1/2"	40"	1
6"x8"	3"	48"	1

* Embedment depth applies in both strong and weak soil.

WOOD POSTS

PERFORATED STEEL TUBES (P.S.T.)		
POST SIZE	Embedment Depth	No. of P.S.T.s permitted within 7 ft path
1 1/2" x 1 1/2"	3'-0"	2
1 3/4" x 1 3/4"	3'-0"	2
2" x 2"	3'-6"	2
2 1/4" x 2 1/4"	4'-0"	1
2 1/2" x 2 1/2"	4'-6"	1

* Use 3"x3"x3/16" Stub for 2 1/2"x2 1/2" PST Applications.

PERFORATED STEEL TUBE (PST) POSTS

GENERAL NOTES:

1. Refer to Std Dwg S-00 for sign framing details.
2. See plans for type of post, size and embedment type.
3. To maintain crashworthiness, install no more than the number of P.S.T.s or wood posts specified in the tables within 7' of each other.
4. Do not install wood posts larger than 6"x8".
5. Do not use the supports on this drawing for multiple support signs if supports are separated by more than 7 feet.
6. Treat all field cuts and field drilled holes in wood posts in accordance with Section 730-2.04 of the Standard Specifications.

State of Alaska DOT&PF
ALASKA STANDARD PLAN

LIGHT SIGN STRUCTURE
POST EMBEDMENT

Adopted as an Alaska Standard Plan by: Kenneth J. Fisher, P.E.
Chief Engineer

Adoption Date: 02/08/2019

Last Code and Stds. Review
By: Date:

Next Code and Standards Review date:02/08/2029